CHARLOTTE BILTGEN

OTTO Table

Dimensions

H 60 x L 43 x D 45 cm
H 23.6'' x D 16.9'' x 17.7''

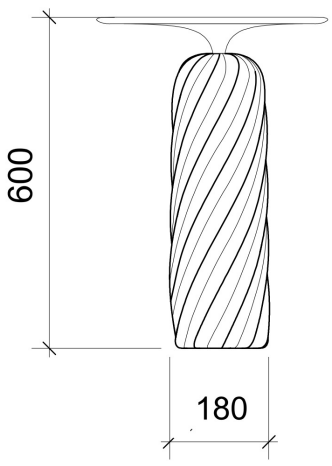

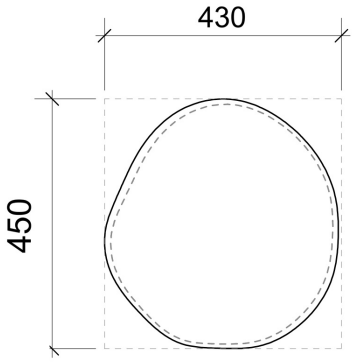

Materials

Bronze base

copyrights charlotte biltgen